AL176ULB Data Sheet

Rev. DSAL176ULB - B03I

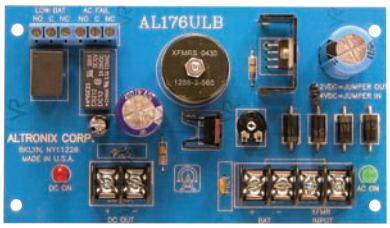

Overview

- The AL176ULB is a power limited power supply/charger that converts a 24VAC input, into 12VDC or 24VDC output, *(see specifications)*. This is intended for use in applications requiring UL Recognition for Access Control (UL294).

AL176ULB

- 12VDC or 24VDC @1.75 amp continuous supply current.

Specifications

- Input 24VAC/40VA from UL Recognized transformer.
- Field selectable 12VDC or 24VDC power limited output.
- Class 2 Rated power limited output.
- Filtered and electronically regulated output.
- Maximum charge current: 400mA.
- Automatic switch over to stand-by battery when AC fails (zero voltage drop).
- AC fail supervision (form "C" 1 amp @ 28VDC).
- Low battery supervision (form "C" 1 amp @ 28VDC).
- AC input and DC output LED indicators.
- Short circuit and thermal overload protection.
- Includes power supply and battery leads.

Board Dimensions (approximate)

3.1”W x 5.3”L x 1.4”H

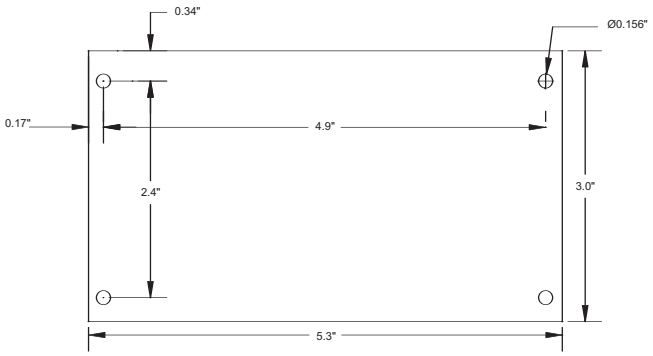

Agency Approvals

UL Recognized component for US and Canada.